Spatial OEM Development Kit Manual

Table of Contents

1 Revision History

Version	Date	Changes
3.0	29/04/2015	Updated for hardware v1.2
2.0	22/04/2013	Updated for hardware v1.1
1.0	28/08/2012	Initial Release

2 Introduction

The Spatial OEM development kit allows developers to quickly test and integrate Spatial OEM into prototypes and low quantity products. It provides the user with access to all of Spatial OEM's interfaces with a number of convenient connection options.

2.1 Kit Contents

The Spatial OEM Development Kit includes:

1. 1x Spatial OEM Module (pre installed)
2. 1x OEM Development Board
3. 1x GNSS Antenna
4. 1x Mini USB to USB A cable
5. 1x U.FL to U.FL cable (pre installed)

Attention
The OEM development board is an electrostatic sensitive device and must be handled with care. Precautions must be taken when operating the OEM development board.

3 Quick Start

The Spatial OEM development kit is ready to function straight out of the box using the USB interface. It is recommended that users familiarise themselves with Spatial OEM through the Spatial Manager software prior to starting their own integration.

1. If you are using Windows, install Java from http://www.java.com.
2. Download Spatial Manager from the Advanced Navigation website.
3. Open Spatial Manager by double clicking on it. If this does not work, right click and choose open with → Java
4. Screw the GNSS antenna onto the board connector finger tight and place the antenna in an area with a view of the sky.
5. Plug one end of the USB cable into the development board and the other end into your computer.
6. Click connect in Spatial Manager. If the connection indicator does not turn green, disconnect and try selecting another serial port.

3.1 Troubleshooting

If the serial port does not show up when the OEM development board is plugged in, the system may require drivers. These are available from http://www.ftdichip.com/Drivers/VCP.htm.

4 OEM Development Board Overview

The OEM development board is a configurable PCB that provides developers with easy access to all of the features of the Spatial OEM module through a number of different interfaces. Illustration 1 shows an image of the OEM development board.

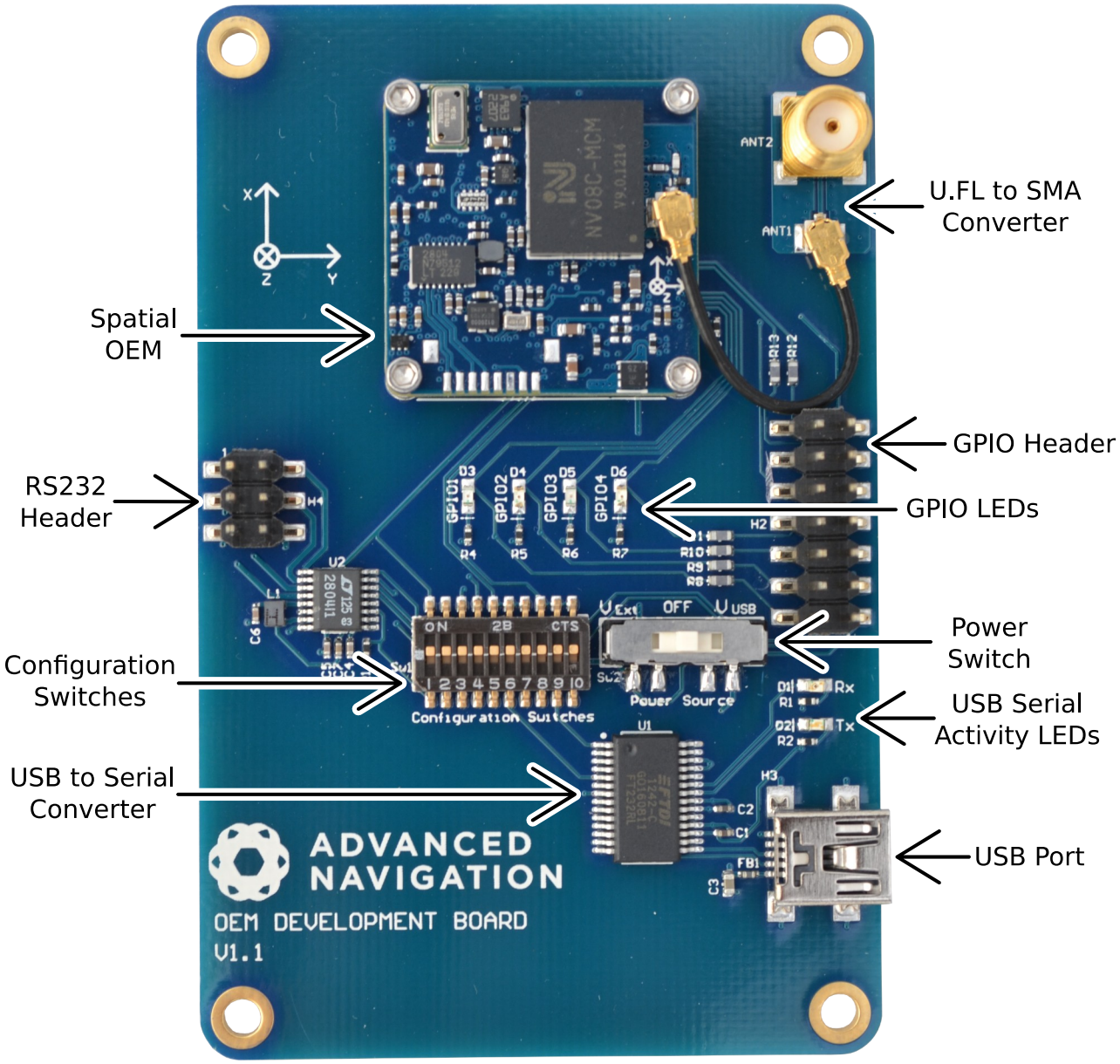

Illustration 1: Labelled OEM development board

4.1 Spatial OEM Module

The Spatial OEM module connects to the development board through a micro 20 pin board to board connector. Four M1.6 stainless steel screws bolt into precision stand-offs and ensure rigid mechanical mounting to the development board. All development boards are shipped with a Spatial OEM already mounted to allow immediate use out of the box. If you wish to remove the Spatial OEM from the development board please refer to the Spatial OEM Reference Manual for mounting and removal instructions. Please note that the board to board connector is fragile and the module should be removed with care.

4.2 Serial UART to USB Converter

An FTDI FT232R USB to serial UART converter chip is included on board to allow the Spatial OEM to interface directly to a computer through USB. Two status LEDs indicate the flow of data to and from the USB port.

USB drivers for all operating systems can be downloaded directly from FTDI's website at http://www.ftdichip.com/Products/ICs/FT232R.htm.

All development boards are shipped with this interface enabled as standard.

4.3 Dual RS232 Transceiver

A Linear Technology LTC2804 dual channel serial UART to RS232 transceiver is included on the development board to allow developers to communicate with the Spatial OEM module via RS232. The LTC2804 allows baud rates of up to 1000000 baud.

Channel 1 of the LTC2804 is for use with the primary serial port on the Spatial OEM Module and Channel 2 of the LTC2804 is for use with GPIO 3 (RS232 TX 2) and GPIO 4 (RS232 RX 2).

Connection to the RS232 level signals is through a 3x2 2.54mm header, see Illustration 2. This header is on the left of the board and allows developers to attach wires or headers as needed.

Please note that by default the LTC2804 is disabled. Switch 1 turns it on, please see section 5.1.

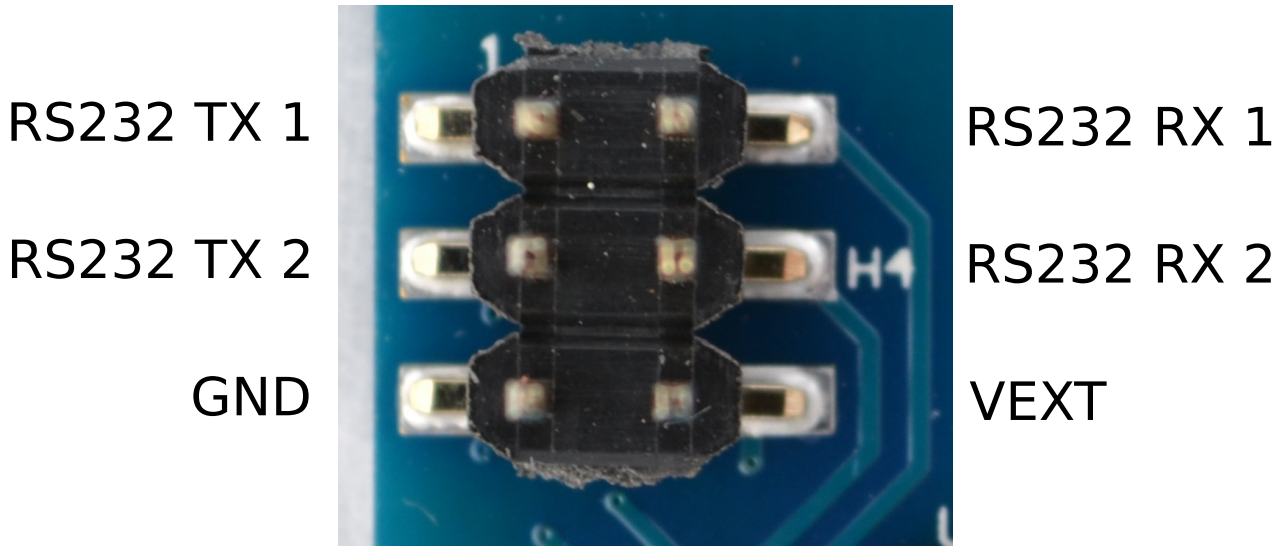

Illustration 2: RS232 header with functions labelled

4.4 GPIO Header and Status LEDs

Users have access to 6 multi-purpose GPIO pins from Spatial OEM. These are available on the 7x2 2.54mm header, see Illustration 3. Four of these pins (GPIO 1-4) are also connected to LEDs on the development board. When using a GPIO in certain input functions, the LED can cause interference with the signal. In this situation, the LED's resistor should be removed. When using the GPIO lines for off board functions it is important to note that these signals are not protected against static charges, over-voltage or over-current events. Failure to protect the signals may result in damage to Spatial OEM. Other pins on the GPIO header include a regulated 3.3V supply from Spatial that can supply up to 50mA, Spatial's reset line and the external voltage input (VEXT).

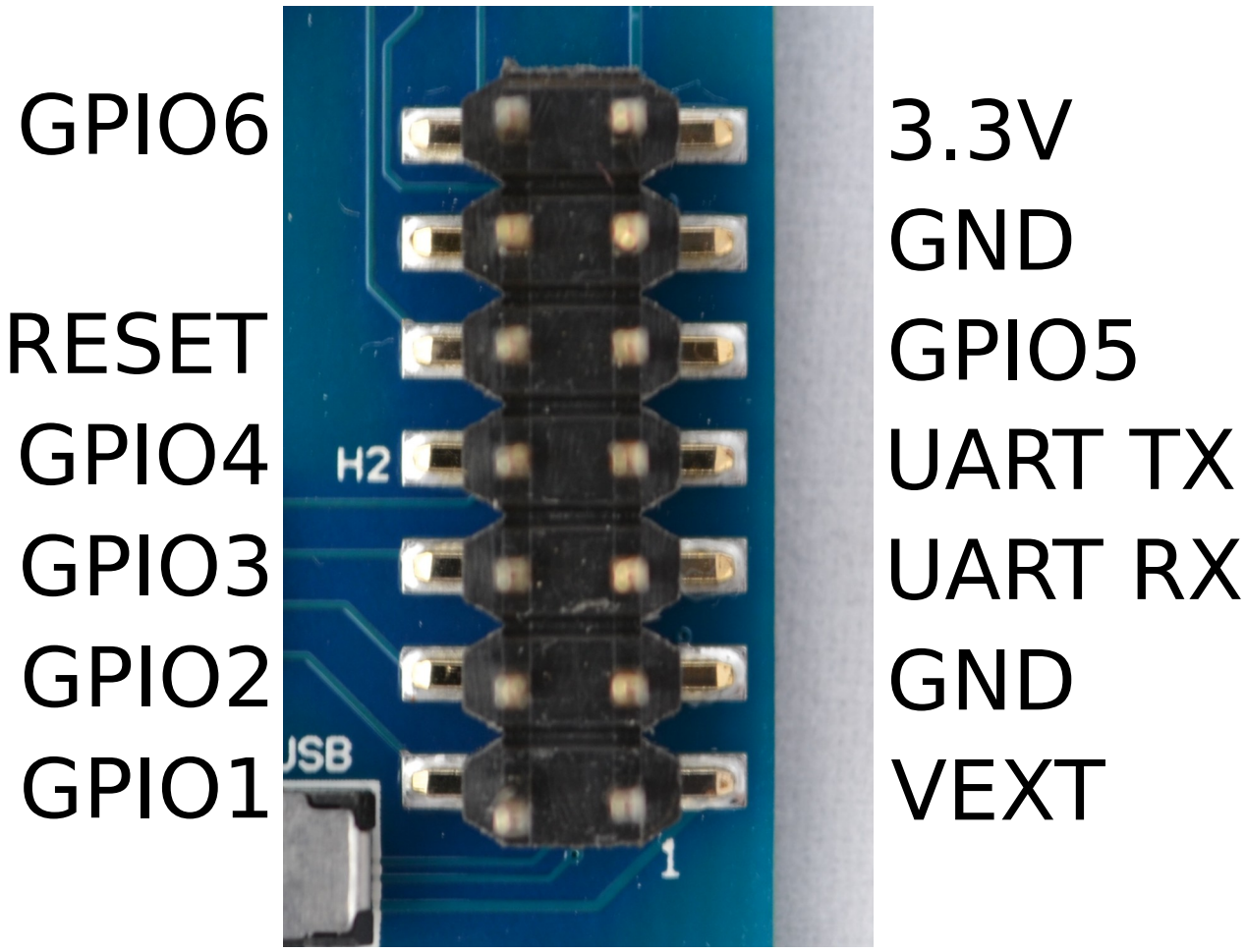

Illustration 3: GPIO header with functions labelled

4.5 RF Connection

Spatial OEM connects to a GNSS antenna through a miniature onboard U.FL connector. Due to the fragile nature of this connector, a U.FL to SMA adapter is supplied on the development board. It is recommended to use this adapter during development to prevent damage to the Spatial OEM U.FL connector.

For applications where the development board is placed inside an enclosure it is recommended

that developers use a U.FL to SMA cable assembly. These assemblies are available from most of the large electronics distributors.

5 Configuration and Operation

5.1 Configuration Switches

The OEM development board contains a DIP switch array that allows the user to route signals between the USB to serial converter, RS232 converter and GPIO header. The configuration switches are shown below in Illustration 4 in their default positions. The default position routes Spatial's primary serial port to the USB to serial converter and has GPIO 3 and GPIO 4 connected only to the GPIO header. Please see Table 1 for the configuration switch functions.

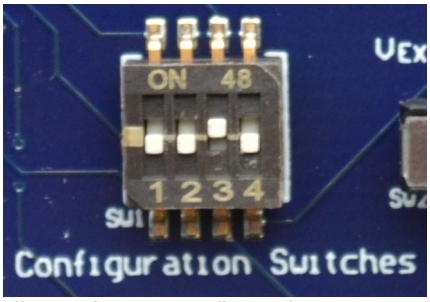

Illustration 4: Configuration switches in their default position

Switch	Default	Function
1	Off	Power on RS232 transceiver. When the RS232 transceiver is powered on GPIO 3 and 4 will be connected to RS232 TX 2 and RS232 RX2 respectively. It will no longer be possible to use GPIO 4 in a TTL level mode. The primary serial port TX will also be connected to RS232 TX 1 but the primary serial port RX will only be connected to RS232 RX 1 if switch 2 is turned on.
2	Off	Connect primary serial port RX to RS232 transceiver (RS232 RX 1). Please note that only one of the switches 2,3 or 4 should be turned on at once to prevent short circuit.
3	Off	Connect primary serial port RX to USB serial converter. Please note that only one of the switches 2,3 or 4 should be turned on at once to prevent short circuit.
4	Off	Connect primary serial port RX to GPIO header (UART RX). Please note that only one of the switches 2,3 or 4 should be turned on at once to prevent short circuit.

Table 1: Configuration switch functions

5.1.1 Primary Serial Port to USB

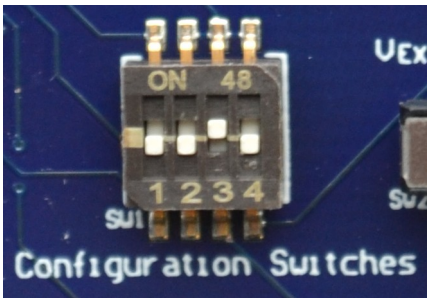

Illustration 5: Switch positions for primary serial port to USB (default)

5.1.2 Primary Serial Port to RS232 1 and GPIO 3 & 4 to RS232 2

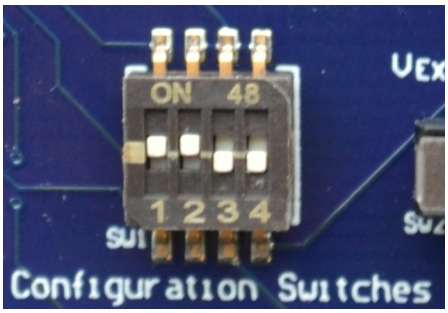

Illustration 6: Switch positions for primary serial port to RS232 1 and GPIO 3 & 4 to RS232 2

5.1.3 Primary Serial Port and GPIO 3 & 4 to GPIO Header at TTL levels

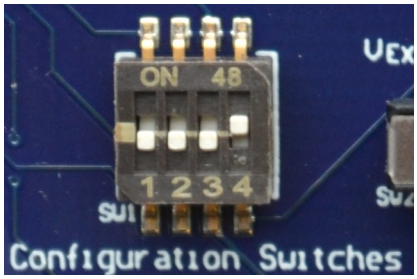

Illustration 7: Switch positions for primary serial port and GPIO 3 & 4 to GPIO header at TTL levels

5.2 Power source

The development board has two power source options; USB power (5V nominal) or an external power source. By default, the development board is configured to use USB power. The external power source can be fed into the board through VEXT on either the GPIO header of RS232 header and can be any voltage between 4V and 36V. Please refer to the Spatial OEM Reference Manual for full power supply requirements. The power source is selected by a three way switch, please see Illustration 8 and Illustration 9.

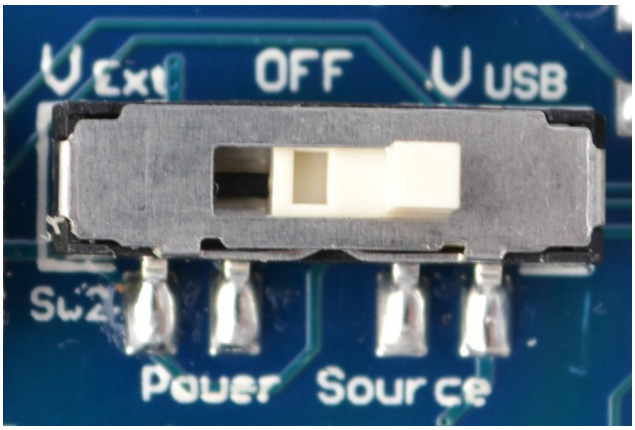

Illustration 8: Power switch position for USB power (default)

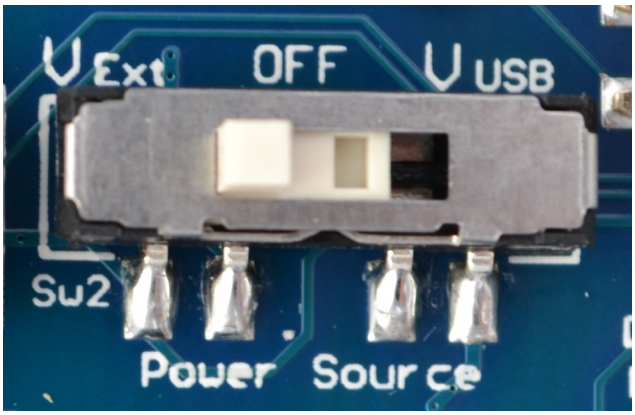

Illustration 9: Power switch position for external power

6 Electrical

6.1 Schematics

See the following pages for the development board schematics.

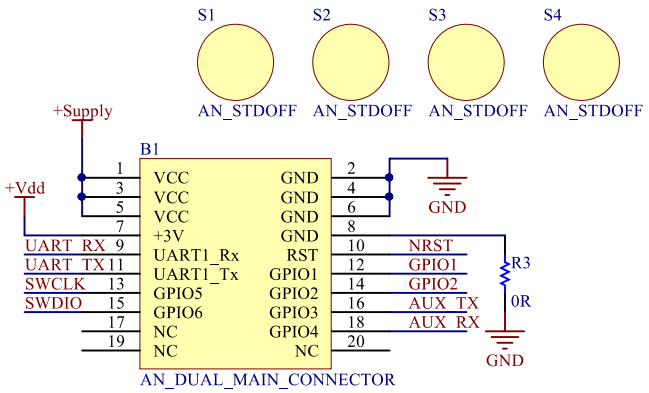

SPATIAL OEM MODULE

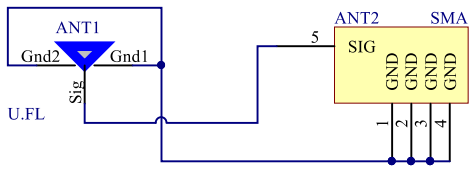

U.FL to SMA

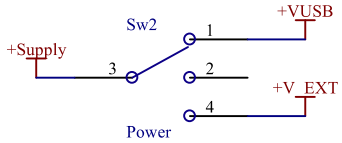

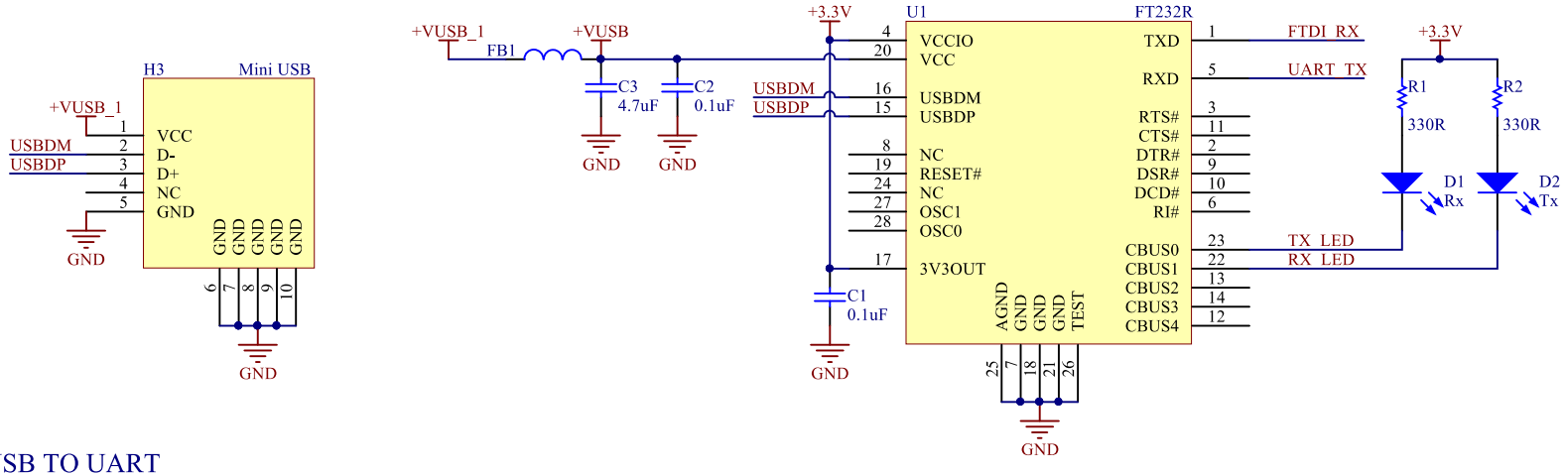

FTDI USB TO UART

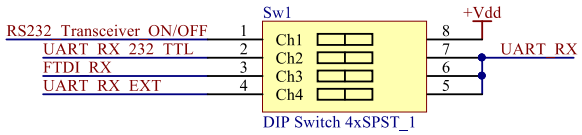

Configuration Switches

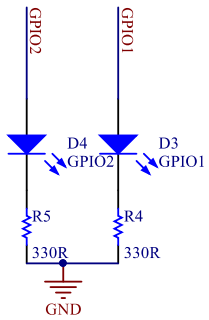

GPIO Status LEDs

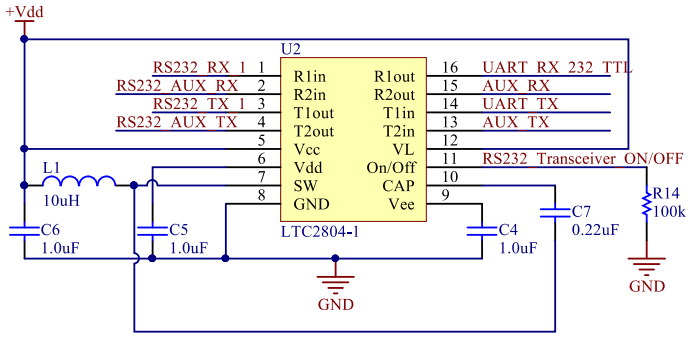

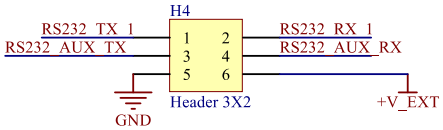

RS232 Interface

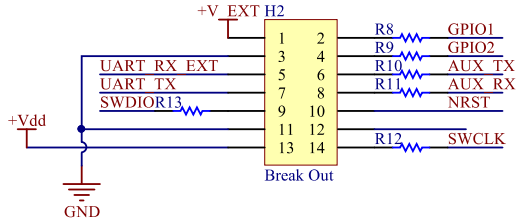

IO Interface

6.2 Bill of Materials

Item #	Designator	Quantity	Mfg Part #	Comment	Manufacturer
1	ANT1	1	U.FL-R-SMT(10)	Surface Mount U.FL Connector	Hirose
2	ANT2	1	CONSMA001-SMD	Surface Mount SMA Connector	Linx Technologies Inc
3	B1	1	DF40C(2.0)-20DS-0.4V(51)	Spatial Connector (20pin 0.4mm pitch board-board)	Hirose
4	C1, C2	2	GRM155R71C104KA88D	0.1uF 0402 Ceramic Capacitor	Murata
5	C3	1	C1608X5R1A475K/0.50	4.7uF 0603 Ceramic Capacitor	TDK Coporation
6	C4, C5, C6	3	GRM155R61A105KE15D	1.0uF 0402 Ceramic Capacitor	Murata
7	C7	1	C1005X5R1E224K	0.22uF 0402 Ceramic Capacitor	TDK Corporation
8	D1	1	LTST-C190KSKT	Yellow LED	Lite-On Inc
9	D2	1	LTST-C191KGKT	Green LED	Lite-On Inc
10	D3, D5	2	LTST-C191KRKT	Red LED	Lite-On Inc
11	D4, D6	2	LTST-C191KFKT	Orange LED	Lite-On Inc
12	FB1	1	BLM15AX221SN1D	0402 Ferrite Bead	Murata
13	H2	1	15-91-2140	2x7 2.54mm pitch header	Molex
14	H3	1	UX60-MB-5ST	Mini USB Connector	Hirose
15	H4	1	15912060	3x2 2.54mm pitch header	Molex
16	L1	1	VLS201612ET-100M	10uH 2x1.6mm Inductor	TDK Corporation
17	R1, R2, R4, R5, R6, R7	6	ERJ-2GEJ331X	330R 0402 Resistor	Panasonic
18	R3	1	RMCF0402ZT0R00	0R 0402 Resistor	Stackpole Electronics Inc
19	R8, R9, R10, R11, R12, R13	6	PRG18BB470MB1RB	PTC 0603	Murata
20	R14	1	RMCF0402JT100K	100k 0402 Resistor	Stackpole Electronics Inc

21	Sw1	1	218-10LPST	10 Pole Single Throw DIP Switch Array	CTS Electrocomponents
22	Sw2	1	EG1381A	1 Pole 3 Throw DIP Switch	E-Switch
23	U1	1	FT232RL	USB to Serial UART Converter IC	FTDI
24	U2	1	LTC2804CGN-1#PBF	Dual Serial UART to RS232 Transceiver	Linear

7 Mechanical

7.1 Mechanical Drawing

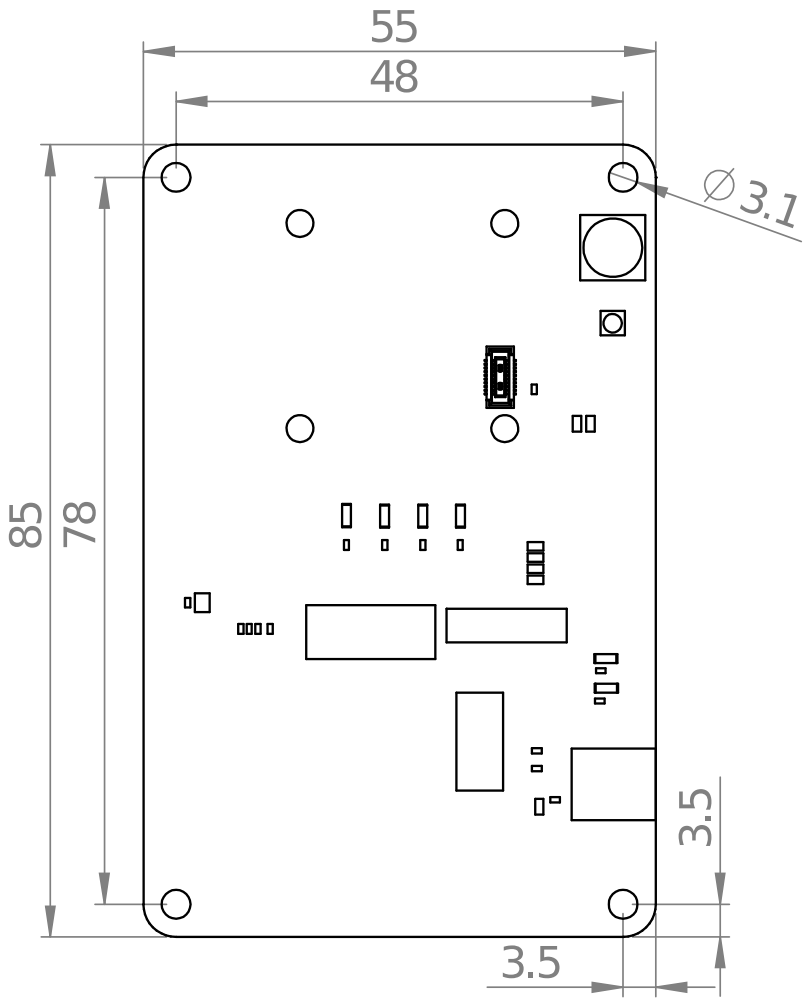

Illustration 10: OEM development board mechanical drawing

7.2 Optional Enclosure

The OEM Development Board can be installed into an optional off the shelf enclosure for more rugged testing if required. The development board will fit inside a Hammond 1550Z106BK or 1550Z111BK heavy duty, watertight enclosure. These enclosures can be purchased from Digikey, Mouser, Element 14 and many other electronics distributors.

Please take care to ensure that all signals from the OEM development board that are routed out of any enclosure design are protected against ESD and other potential electrical hazards that may damage Spatial OEM.